RevNo	Revision note	Date	Signature	Checked

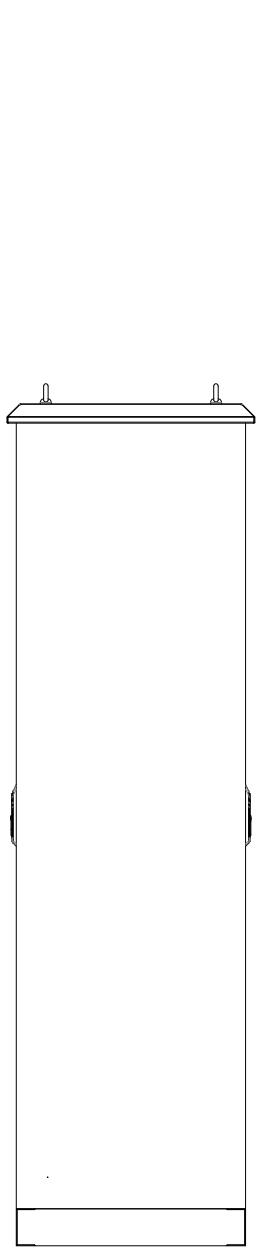

SIDE VIEW

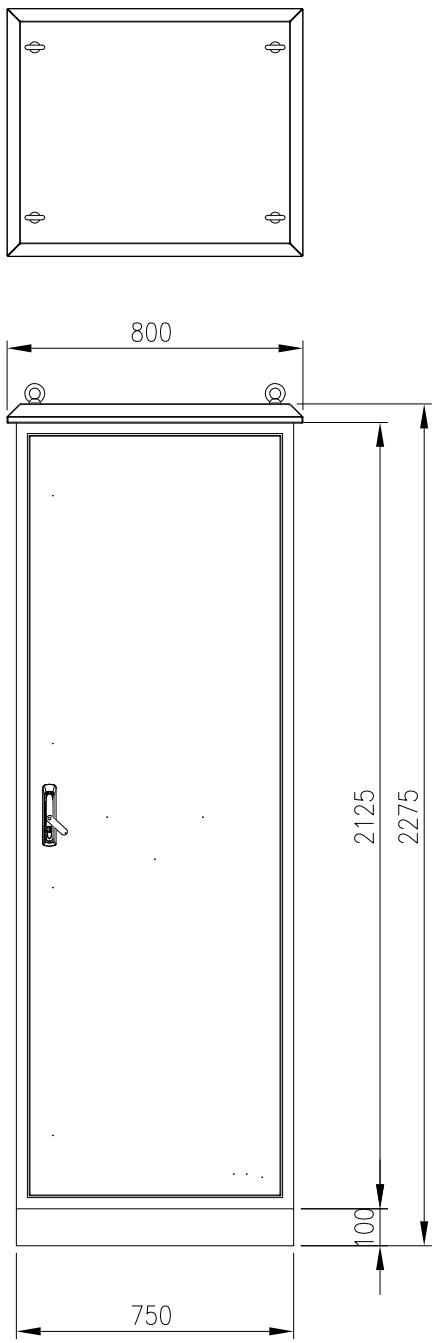

FRONT VIEW
(ASSEMBLY)

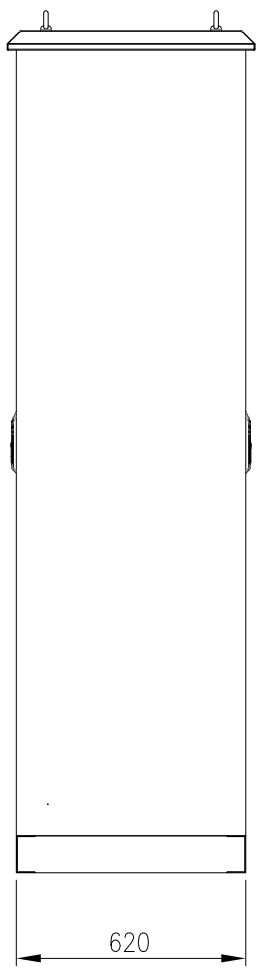

SIDE VIEW

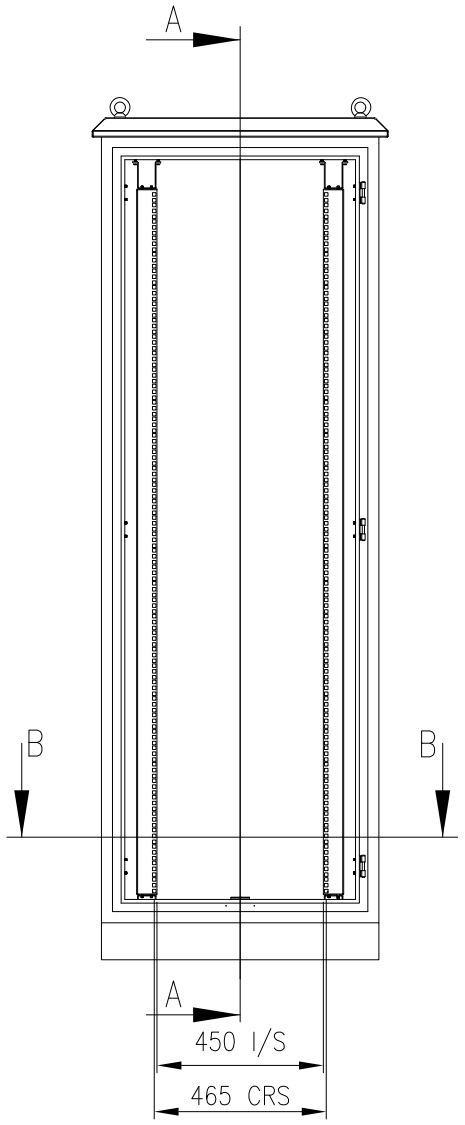

FRONT VIEW
(FRONT DOOR REMOVED)

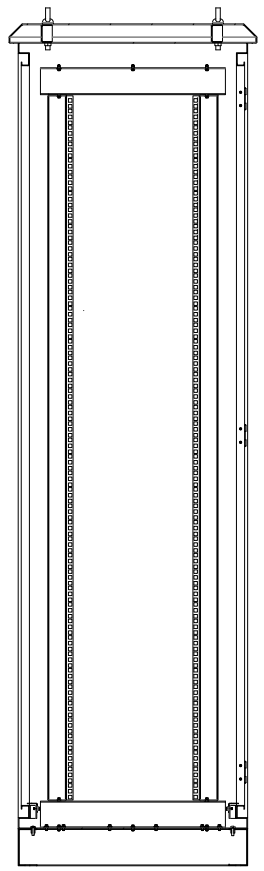

SECTION A–A

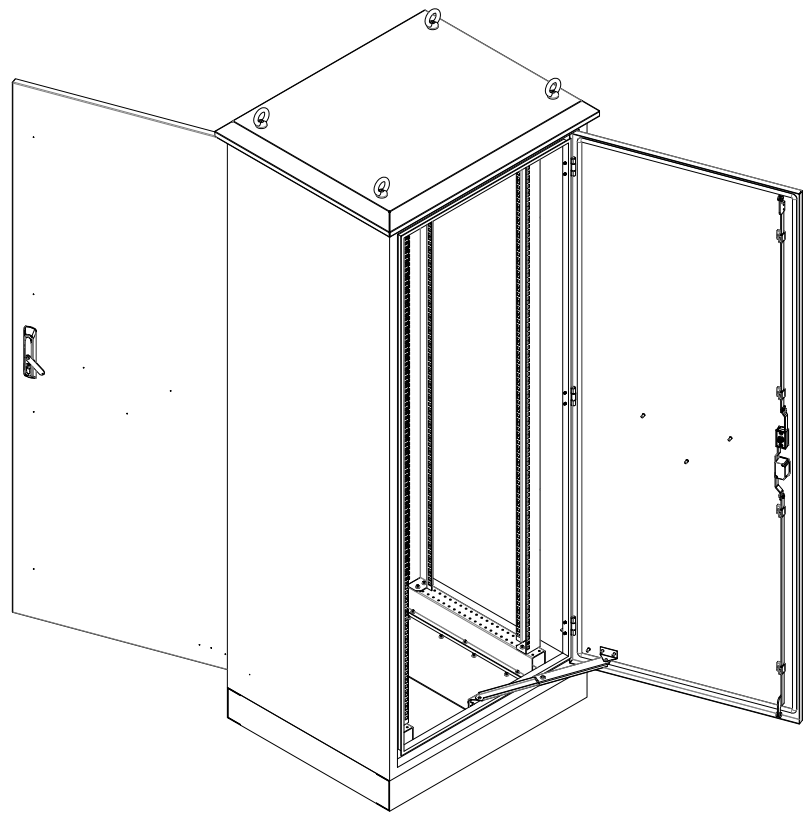

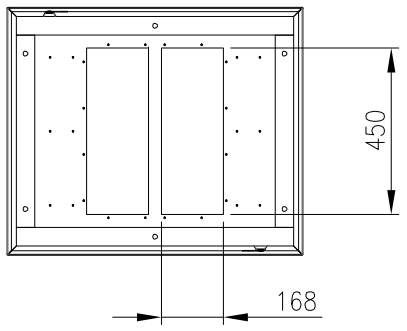

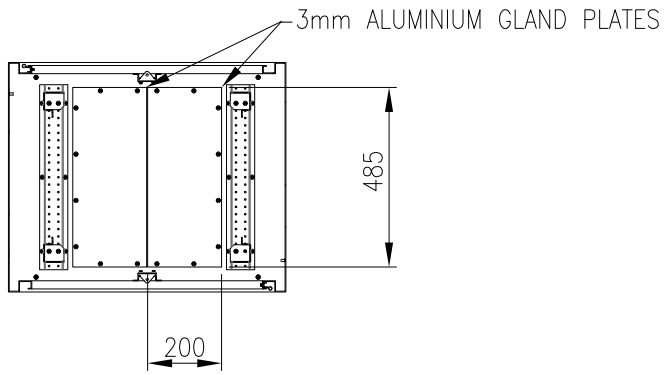

SECTION B–B

MATERIAL
BODY AND PLINTH: 2.0mm GALVANISED STEEL SHEET
DOORS: 2.0mm POWDERCOATED GALVANISED SHEET
19" DATA RAILS: 1.5mm GALVANISED STEEL SHEET
SEAL: POLYURETHANE
SURFACE TREATMENT: POWDER–COAT 80–120micron
COLOUR: RAL9005 MOSS GREEN

PROTECTION: IP66
STANDARD: IEC62208, IEC/EN/AS60529, EIA–310D

© IP ENCLOSURES 2017.
THIS DRAWING SHALL NOT BE COPIED OR REPRODUCED
WITHOUT AUTHORISATION FROM IP ENCLOSURES.
www.ipenclosures.com.au

Itemref	Quantity	Title/Name, designation, material, dimension etc			Article No./Reference	
Designed by IP		Checked by IP	Approved by - date 05/06/19	Filename	Date 05/06/19	Scale 1:20
IP Enclosures		42RU CABINET 2275x750x620 (NO VENTS)				
		IP–2277562–0–GRN			Edition 0	Sheet 1/1