SS1 Electrical Enclosure

IP-SS404030

STAINLESS STEEL | SINGLE DOOR | IP66

400H x 400W x 300D

IP Enclosures SS1 Range of grade 316/316L Stainless Steel electrical enclosures are suitable for general industrial applications.

Protection: Complies with IP66 IK10, NEMA 4x (Independent accredited test laboratory)

Standard: IEC62208, IEC/EN/AS60529 (IEC/EN/AS61439 Compliant, Optional UL508A)

Material:
- Body: 1.5mm Grade 316/316L Stainless Steel
- Door: 1.5mm Grade 316/316L Stainless Steel
- Device Mounting Plate: 1.5mm galvanised steel sheet
- Seal: Polyurethane

Surface Finish: 0.4 micron Ra surface brushed finish

Body: The robust monoblock body is fabricated using 1.5mm Grade 316/316L Stainless Steel. Flat face sealing surfaces are provided to increase seal life. Pre-fitted blind nutserts are incorporated to accommodate mounts and accessory fasteners to eliminate drilling and retain IP rating. Integral device plate mounts and M6 earth stud is provided.

Door: The robust surface mounted door is fabricated using 1.5mm Grade 316/316L Stainless Steel and incorporates concealed removable hinges with captive pins. The door is designed for a 110° opening. Each door contains integral cable management rail studs, M6 earth stud.

Seal: A high quality machine-applied full perimeter UL listed Polyurethane seal foamed in place (FIP) provides excellent sealing over a long life. Temperature resistance -40°C to 80°C (160°C short term loading).

Lock: 316 Stainless Steel 8mm square drive quarter turn lock with key.

Device Mounting Plate: The device mounting plate is fabricated using 1.5mm galvanised steel sheet, pressed to provide additional strength and supplied pre-fitted into enclosure as standard.

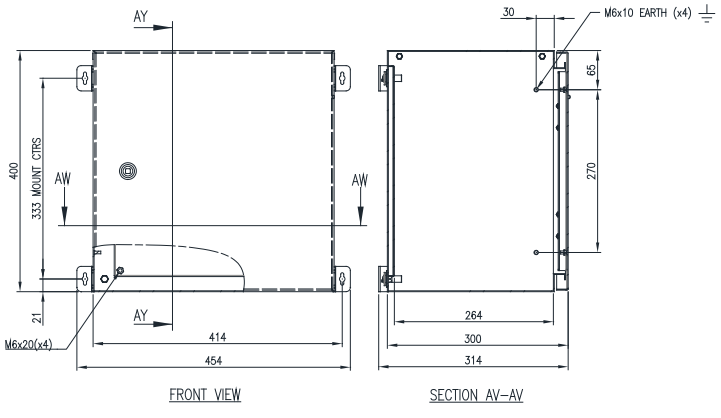

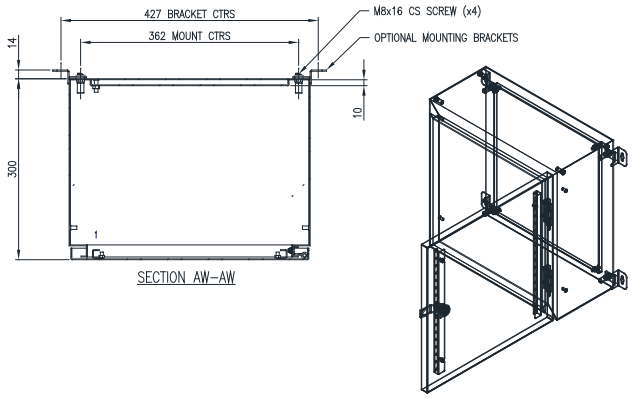

© IP Enclosures 2023