RevNo	Revision note	Date	Signature	Checked
2	GENERAL REVISION	9/7/19	IP	IP

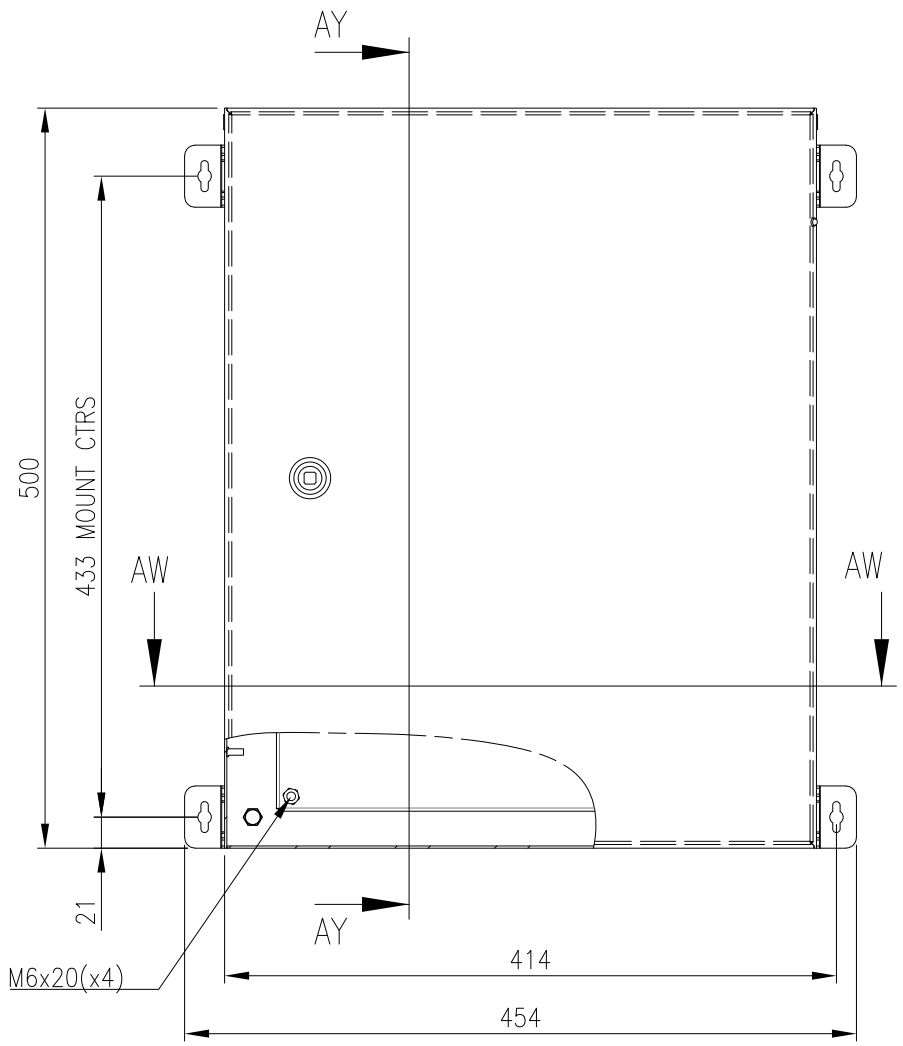

FRONT VIEW

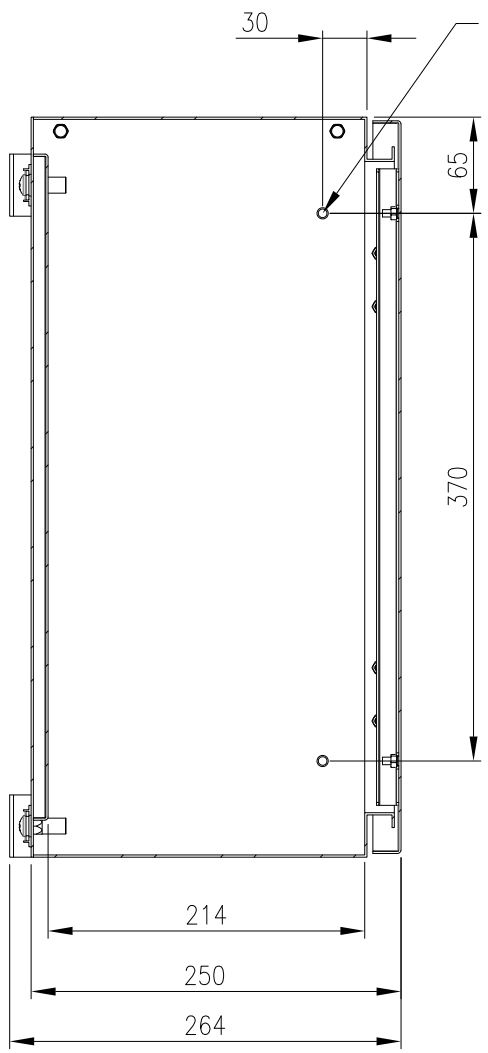

SECTION AV–AV

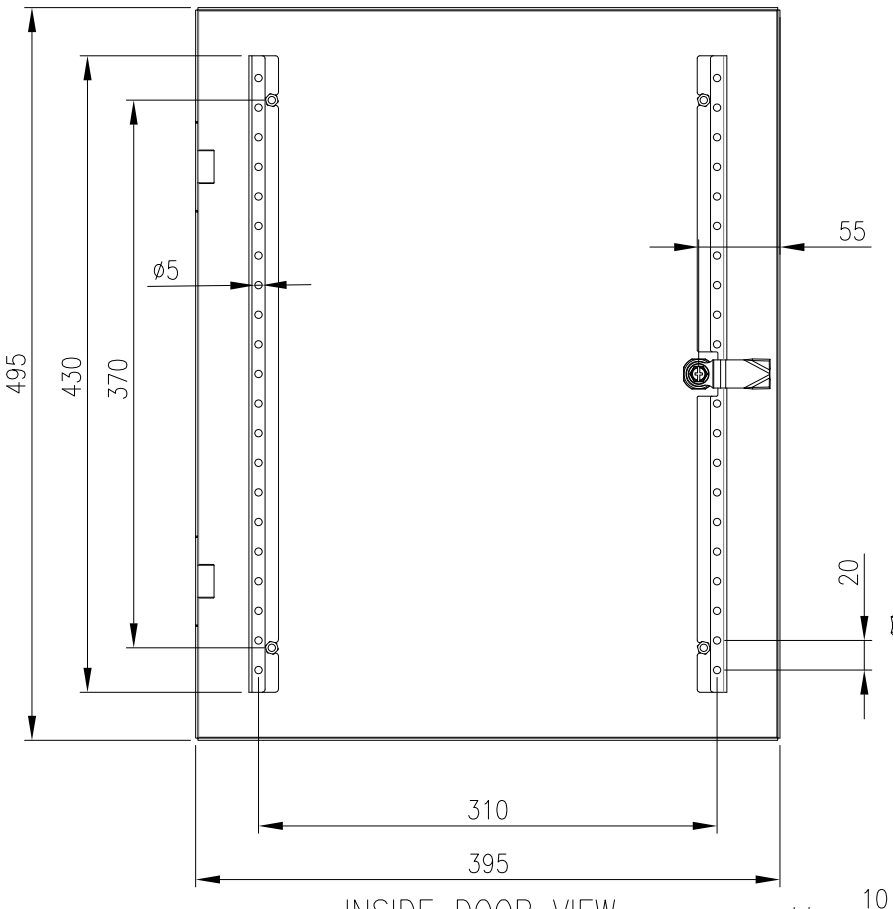

INSIDE DOOR VIEW

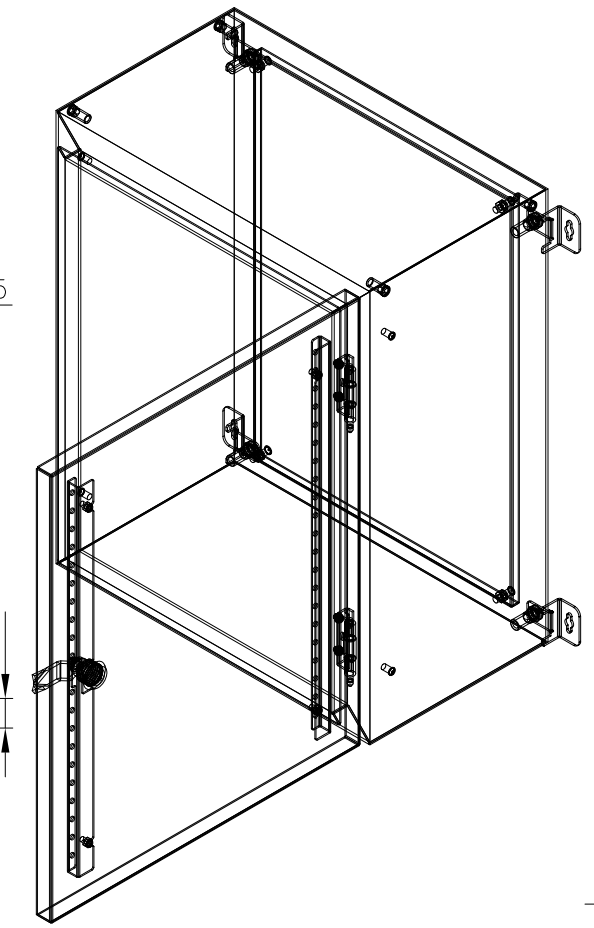

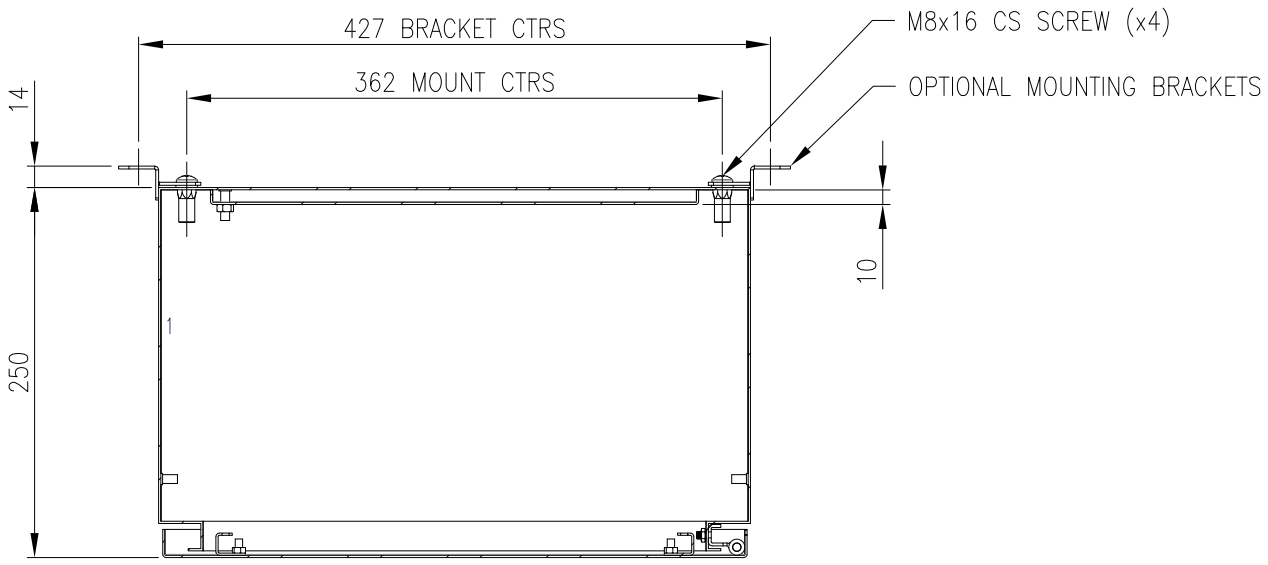

SECTION AW–AW

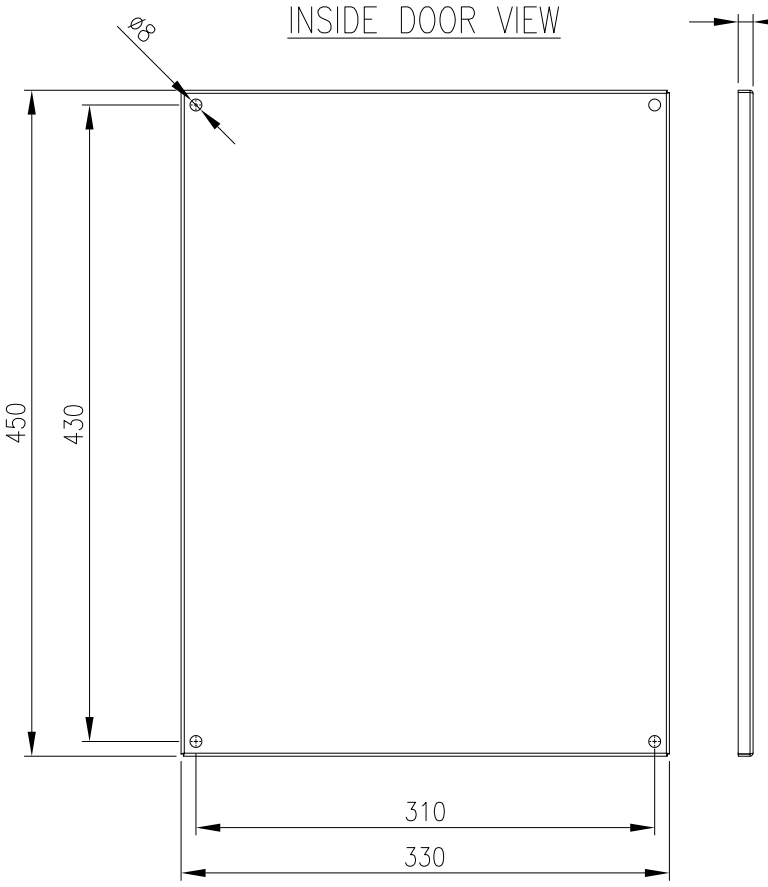

DEVICE MOUNTING PLATE

10

MATERIAL
BODY: 1.5mm 316 STAINLESS STEEL
DOOR: 1.5mm 316 STAINLESS STEEL
DEVICE PLATE: 1.5mm GALV STEEL
SEAL: POLYURETHANE

MASS: 13.9kg

PROTECTION: IP66 IK10, NEMA4x
STANDARD: IEC62208, IEC/EN/AS60529

© IP ENCLOSURES 2016.
THIS DRAWING SHALL NOT BE COPIED OR REPRODUCED
WITHOUT AUTHORISATION FROM IP ENCLOSURES.
www.ipenclosures.com.au

Itemref	Quantity	Title/Name, designation, material, dimension etc		Article No./Reference	
Designed by IP		Checked by IP	Approved by - date 17/10/16	Filename IP–SS504025–01	Date 17/10/16	Scale 1:5
IP Enclosures		500x400x250 316SS ENCLOSURE			
		IP–SS504025–01		Edition 2	Sheet 1/1