RevNo	Revision note	Date	Signature	Checked

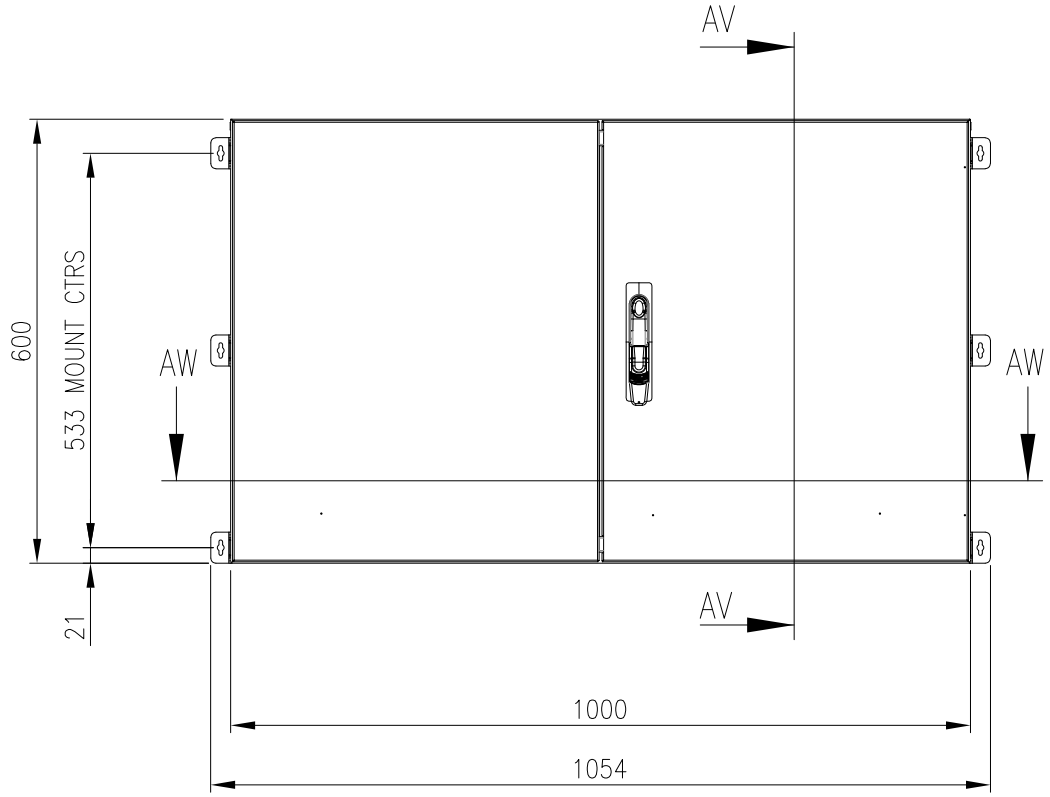

FRONT VIEW

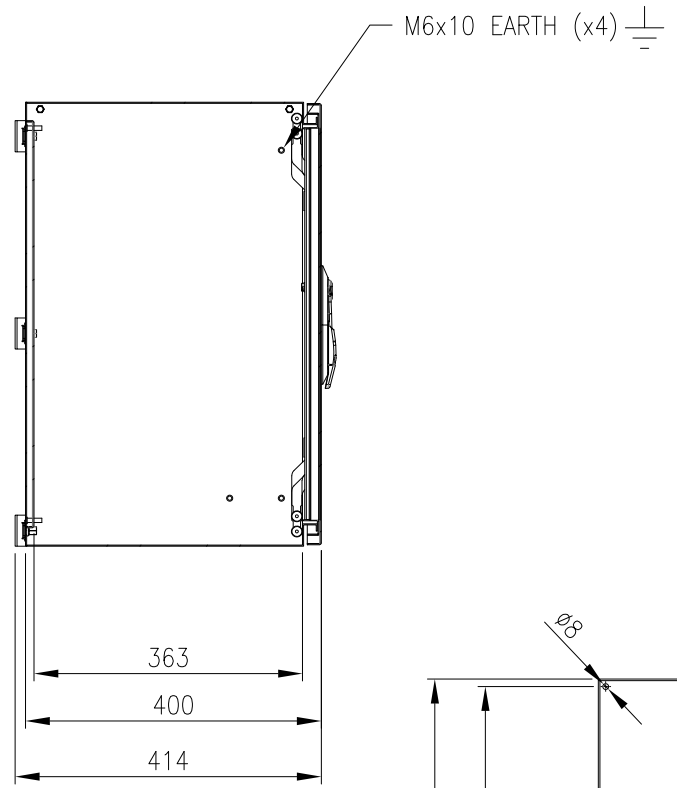

SECTION AV–AV

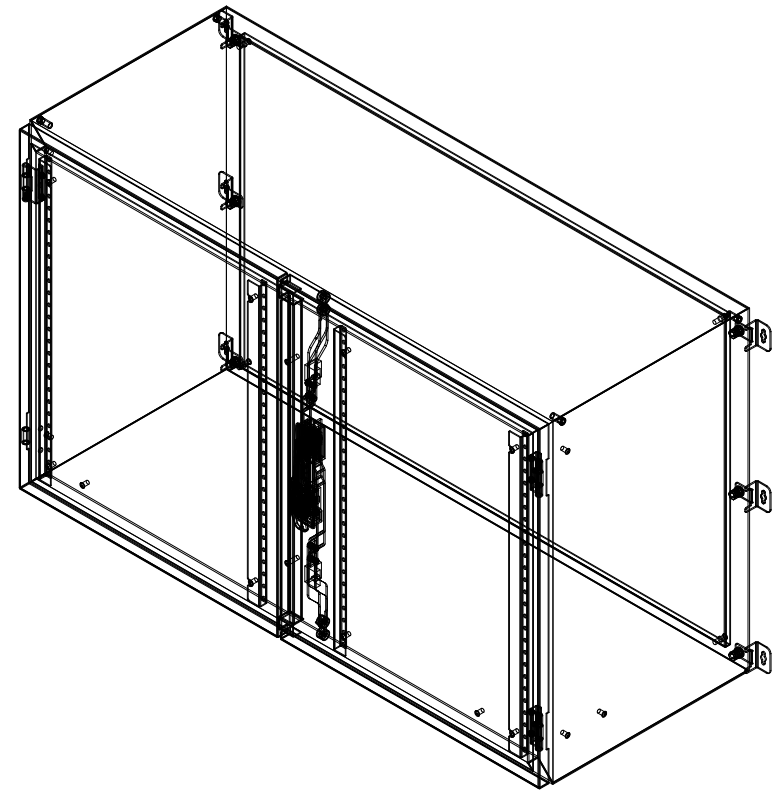

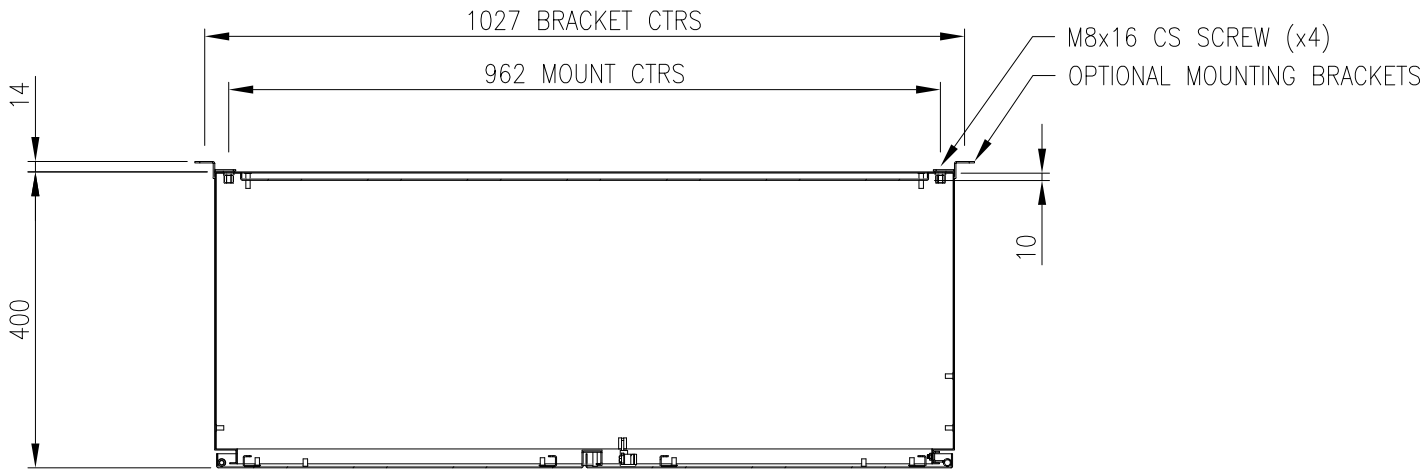

SECTION AW–AW

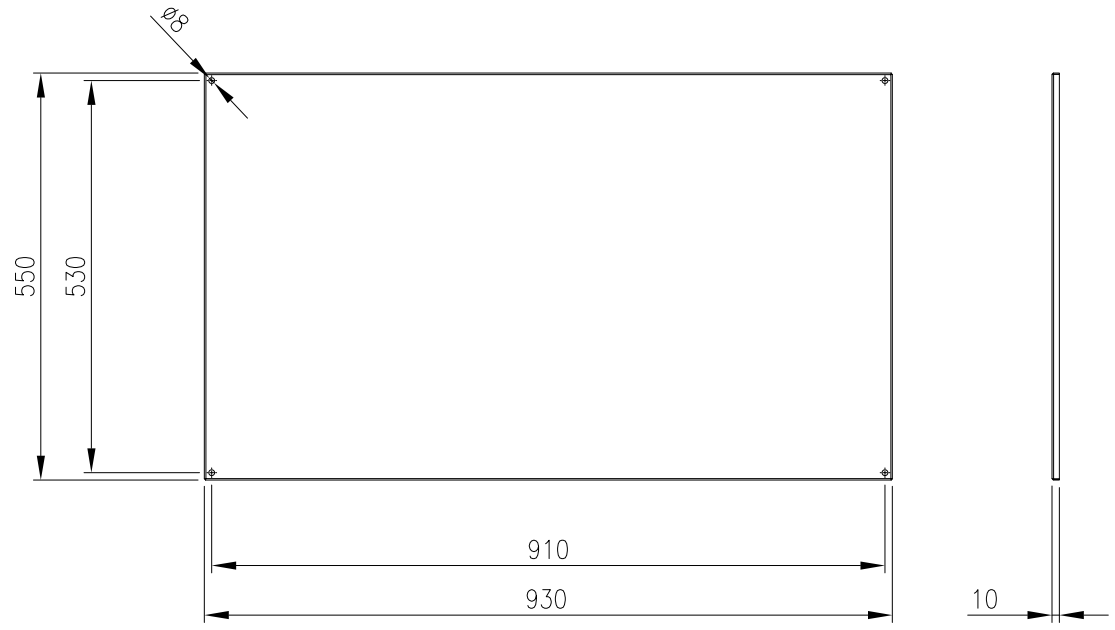

DEVICE MOUNTING PLATE

MATERIAL
BODY: 1.5mm 316 STAINLESS STEEL
DOOR: 1.5mm 316 STAINLESS STEEL
DEVICE PLATE: 1.5mm GALV STEEL
SEAL: POLYURETHANE

PROTECTION: IP66 IK10, NEMA4x
STANDARD: IEC62208, IEC/EN/AS60529

© IP ENCLOSURES 2016.
THIS DRAWING SHALL NOT BE COPIED OR REPRODUCED
WITHOUT AUTHORISATION FROM IP ENCLOSURES.
www.ipenclosures.com.au

Itemref	Quantity	Title/Name, designation, material, dimension etc		Article No./Reference	
Designed by IP	Checked by IP	Approved by - date 16/07/19	Filename IP–SSL6010040–0	Date 16/07/19	Scale 1:10
IP Enclosures		600x1000x400 316SS ENCLOSURE			
		IP–SSL6010040–01		Edition 0	Sheet 1/1